Daisy-Chain Wiring Diagram

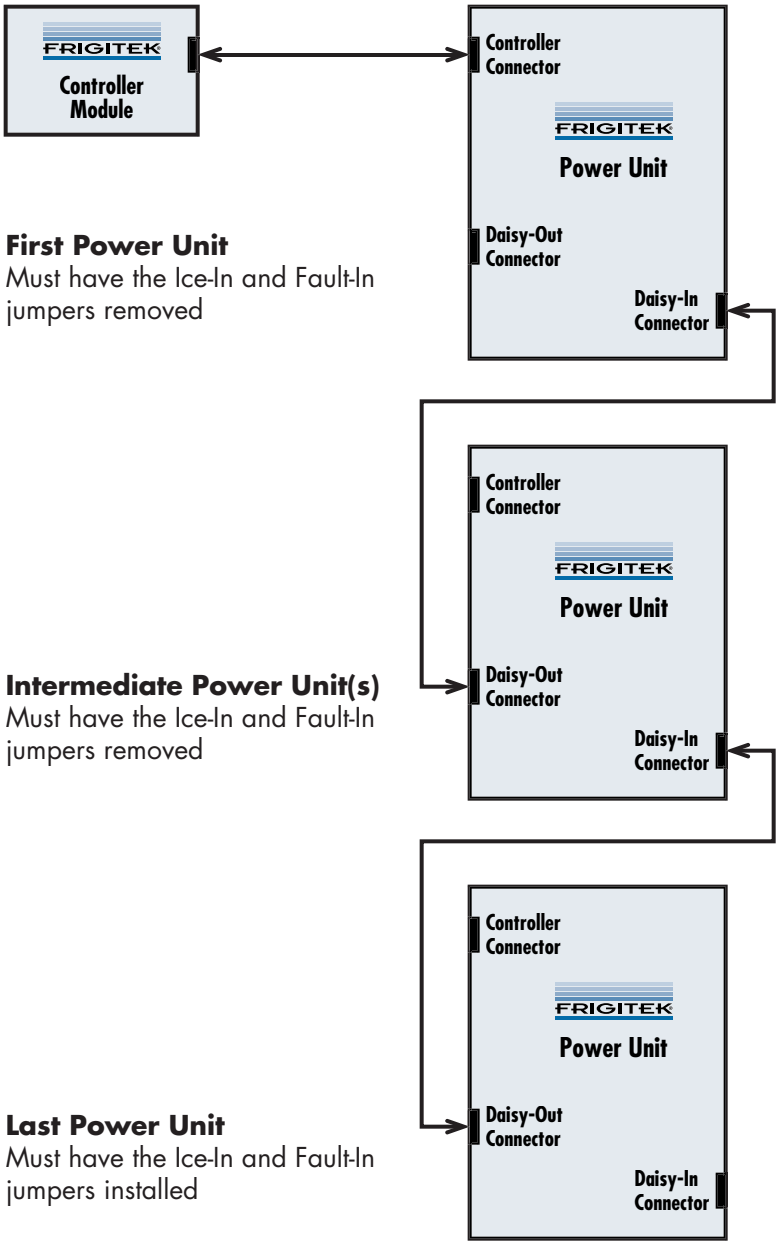

First Power Unit
Must have the Ice-In and Fault-In jumpers removed

Intermediate Power Unit(s)
Must have the Ice-In and Fault-In jumpers removed

Last Power Unit
Must have the Ice-In and Fault-In jumpers installed